PROPOSED DESIGN

EXISTING CONDITION

PAINT COLORS:

NOT FOR COLOR MATCH

BASE:

ICI PAINTS: RED BRICK
(50YR 09/244)

NOT FOR COLOR MATCH

TRIM:

ICI PAINTS: GREEN PINON
(70YY 12/167)

NOT FOR COLOR MATCH

TRIM:

ICI PAINTS: VIRGINIA VINE
(70YY 22/144)

NOT FOR COLOR MATCH

TRIM:

ICI PAINTS: MANILLA TAN
(20YY 61/127)

NOTE: The Illinois MAIN STREET Program, through the Illinois Historic Preservation Agency, has provided this free design assistance to qualified property/ business owners in the officially designated MAIN STREET project areas. The rendering on this sheet is a conceptual view of the facade renovation based on information supplied to the staff architect. Should obscured architectural details or problems be revealed during the work, the local project manager and/or the staff architect should be consulted.

ILLINOIS MAIN STREET

OFFICE OF LIEUTENANT GOVERNOR BOB KUSTRA

Architectural Services: **Illinois Historic Preservation Agency**
1 Old State Capitol Plaza/Springfield, Illinois 62701/217-782-7459

SAV-MOR PHARMACY
123 WEST SALE
TUSCOLA, ILLINOIS

NORTH ELEVATION
NOT TO SCALE

Drawn By:	Project No.:
BSL	9753
Date:	Sheet: Of:
2 - 98	1 2

PROPOSED DESIGN WITH AWNINGS

EXISTING CONDITION

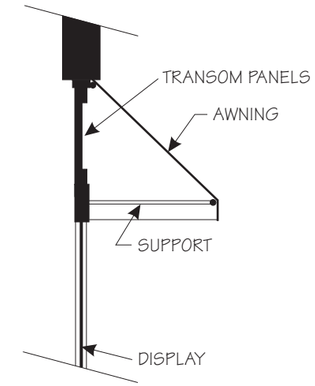

AWNING SECTION

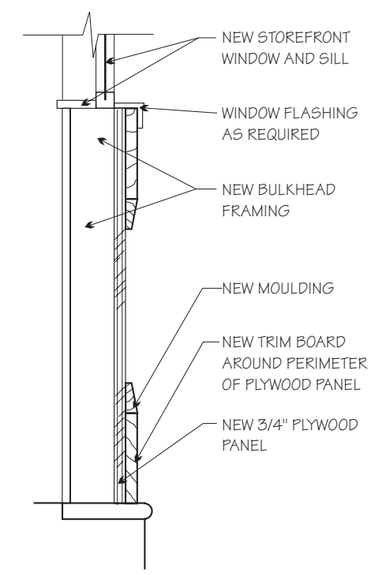

BULKHEAD SECTION

NOTE: The Illinois MAIN STREET Program, through the Illinois Historic Preservation Agency, has provided this free design assistance to qualified property/ business owners in the officially designated MAIN STREET project areas. The rendering on this sheet is a conceptual view of the facade renovation based on information supplied to the staff architect. Should obscured architectural details or problems be revealed during the work, the local project manager and/or the staff architect should be consulted.

ILLINOIS MAIN STREET

OFFICE OF LIEUTENANT GOVERNOR BOB KUSTRA

Architectural Services: **Illinois Historic Preservation Agency**
1 Old State Capitol Plaza/Springfield, Illinois 62701/217-782-7459

SAV-MOR PHARMACY
123 WEST SALE
TUSCOLA, ILLINOIS

NORTH ELEVATION
NOT TO SCALE

Drawn By:	Project No.:
BSL	9753
Date:	Sheet: Of:
2 - 98	2 2