AWNING PROFILE:

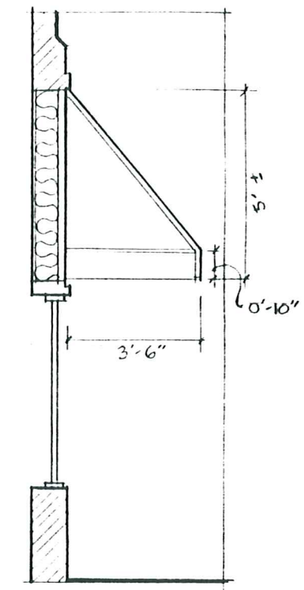

Note: The *Illinois* MAIN STREET Program, through the Illinois Historic Preservation Agency, has provided this free design assistance to qualified property/business owners in the officially designated MAIN STREET project areas. The rendering on this sheet is a conceptual view of the facade renovation based on information supplied to the staff architect. Should obscured architectural details or problems be revealed during the work, the local project manager and/or the staff architect should be consulted.

Illinois MAIN STREET
OFFICE OF LIEUTENANT GOVERNOR BOB KUSTRA
Architectural Services: **Illinois Historic Preservation Agency**
1 Old State Capitol Plaza/Springfield, Illinois 62701/217-782-9336

WCCI RADIO
316 MAIN ST.
SAVANNA, IL

WEST ELEV.
NOT TO SCALE

Drawn by:	Project No.
PEG	9507
Date: 6-95	Sheet: 1 Of: 1