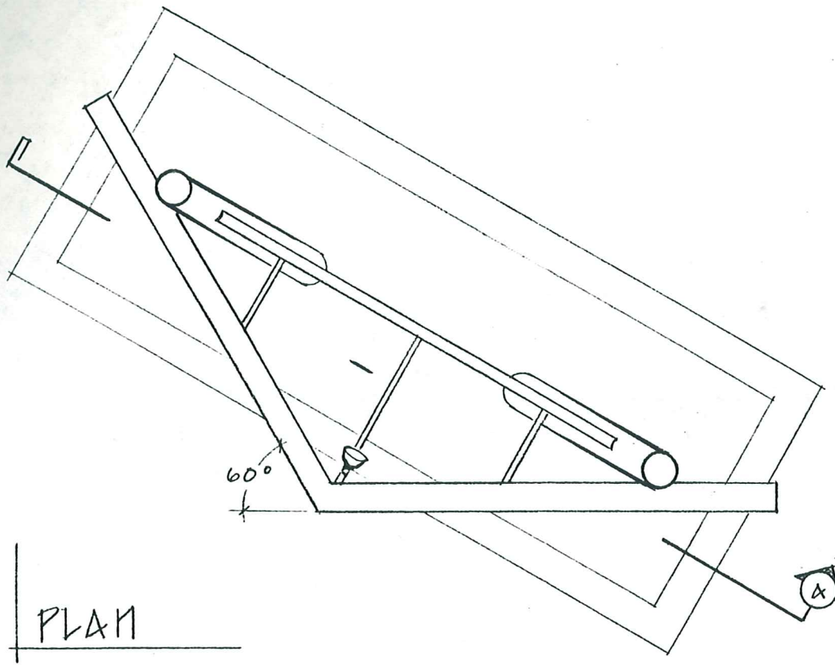

PLAN

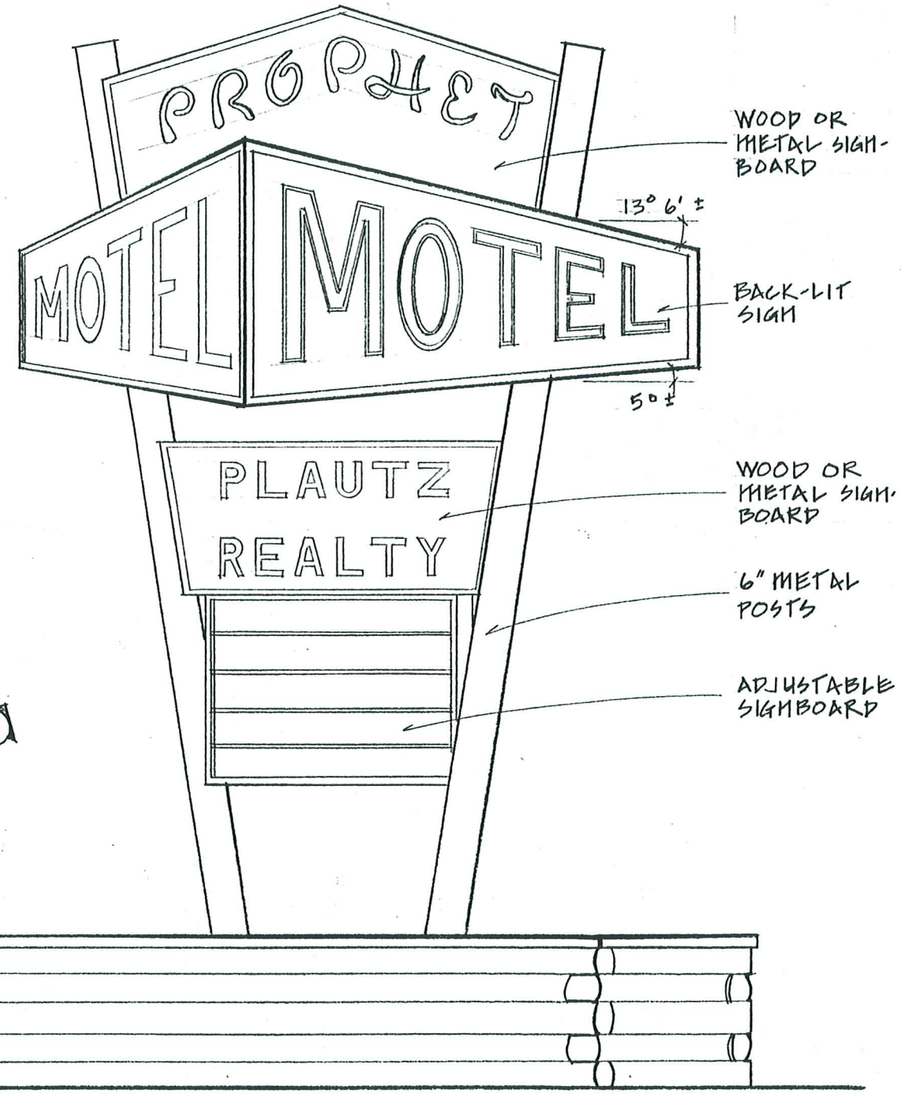

SIDE ELEV.

SECTION A:

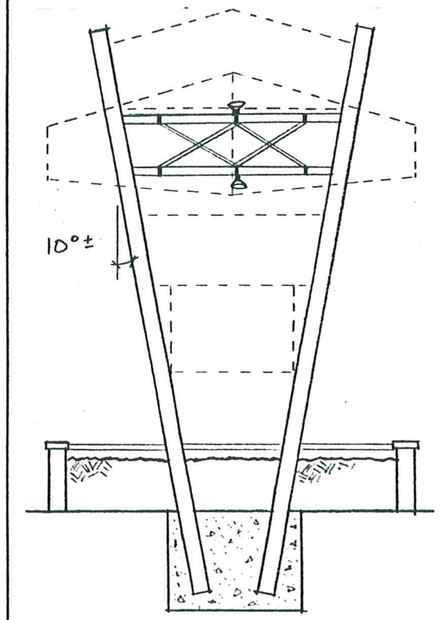

SITE MAP:

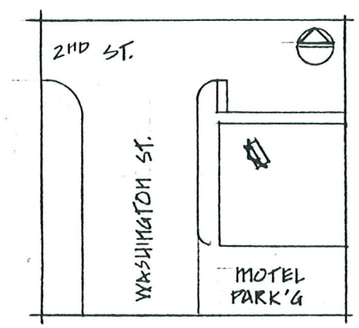

Note: The *Illinois* MAIN STREET Program, through the Illinois Historic Preservation Agency, has provided this free design assistance to qualified property/business owners in the officially designated MAIN STREET project areas. The rendering on this sheet is a conceptual view of the facade renovation based on information supplied to the staff architect. Should obscured architectural details or problems be revealed during the work, the local project manager and/or the staff architect should be consulted.

Illinois MAIN STREET
OFFICE OF LIEUTENANT GOVERNOR BOB KUSTRA
Architectural Services: **Illinois Historic Preservation Agency**
1 Old State Capitol Plaza/Springfield, Illinois 62701/217-782-9336

PROPHET MOTEL
201-211 WASHINGTON
PROPHETSTOWN, IL

SIGN
SCALE: AS SHOWN

Drawn by:	Project No.
PEG	9425
Date:	Sheet: Of:
3.95	1 2

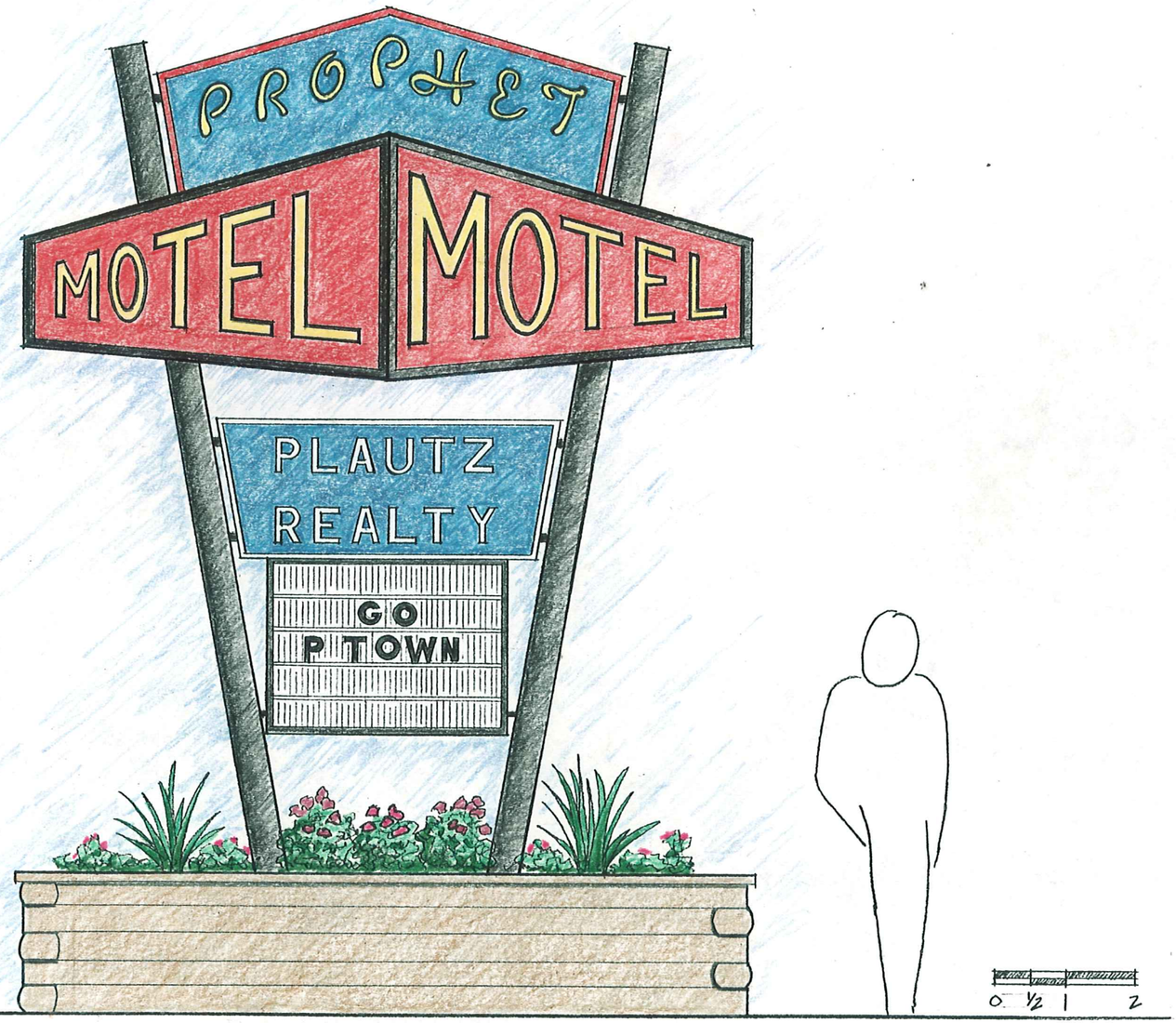

FRONT ELEV.

SIGN COLORS:

BASE 1:

BASE 2:

LETTER 1:

LETTER 2:

OUTLINE:

Note: The *Illinois* MAIN STREET Program, through the Illinois Historic Preservation Agency, has provided this free design assistance to qualified property/business owners in the officially designated MAIN STREET project areas. The rendering on this sheet is a conceptual view of the facade renovation based on information supplied to the staff architect. Should obscured architectural details or problems be revealed during the work, the local project manager and/or the staff architect should be consulted.

Illinois MAIN STREET
OFFICE OF LIEUTENANT GOVERNOR BOB KUSTRA
Architectural Services: **Illinois Historic Preservation Agency**
1 Old State Capitol Plaza/Springfield, Illinois 62701/217-782-9336

PROPHET MOTEL
201-211 WASHINGTON
PROPHETSTOWN, IL

SIGN
SCALE: AS SHOWN

Drawn by:	Project No.
PEG	9425
Date:	Sheet: Of:
3/95	2 2