EXISTING CONDITIONS

PROPOSED DESIGN

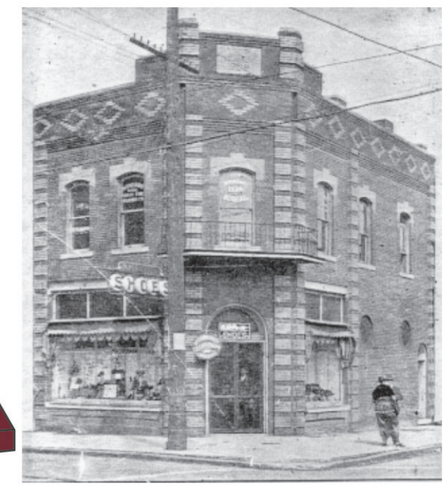

HISTORIC PHOTO

PAINT COLORS:

NOT FOR COLOR MATCH

TRIM:
ICI: ABERDEEN PLACE
(70 RR 08/150)

NOT FOR COLOR MATCH

TRIM:
ICI: ONIONSKIN TAN
(00 YY 55/163)

NOT FOR COLOR MATCH

DETAILS:
ICI: DARK SECRET
(00 NN 05/000)

AWNING SECTION:

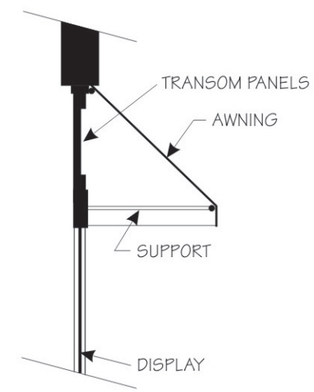

NOTE: The Illinois MAIN STREET Program, through the Illinois Historic Preservation Agency, has provided this free design assistance to qualified property/ business owners in the officially designated MAIN STREET project areas. The rendering on this sheet is a conceptual view of the facade renovation based on information supplied to the staff architect. Should obscured architectural details or problems be revealed during the work, the local project manager and/or the staff architect should be consulted.

ILLINOIS MAIN STREET

OFFICE OF LIEUTENANT GOVERNOR BOB KUSTRA

Architectural Services: **Illinois Historic Preservation Agency**
1 Old State Capitol Plaza/Springfield, Illinois 62701/217-782-7459

REED, HELLER, MANSFIELD AND GROSS
1100 WALNUT STREET
MURPHYSBORO, ILLINOIS

SOUTH ELEVATION
NOT TO SCALE

Drawn By:	Project No.:
MTB	9845
Date: 11/98	Sheet: 1 Of: 2

EXISTING CONDITIONS

PROPOSED DESIGN

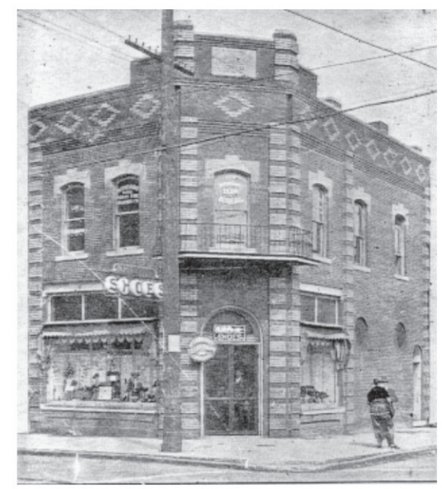

HISTORIC PHOTO

PAINT COLORS:

NOT FOR COLOR MATCH

TRIM:
ICI: ABERDEEN PLACE
(70 RR 08/150)

NOT FOR COLOR MATCH

TRIM:
ICI: ONIONSKIN TAN
(00 YY 55/163)

NOT FOR COLOR MATCH

DETAILS:
ICI: DARK SECRET
(00 NN 05/000)

NOTE: The Illinois MAIN STREET Program, through the Illinois Historic Preservation Agency, has provided this free design assistance to qualified property/ business owners in the officially designated MAIN STREET project areas. The rendering on this sheet is a conceptual view of the facade renovation based on information supplied to the staff architect. Should obscured architectural details or problems be revealed during the work, the local project manager and/or the staff architect should be consulted.

ILLINOIS MAIN STREET
OFFICE OF LIEUTENANT GOVERNOR BOB KUSTRA
Architectural Services: **Illinois Historic Preservation Agency**
1 Old State Capitol Plaza/Springfield, Illinois 62701/217-782-7459

REED, HELLER, MANSFIELD AND GROSS
1100 WALNUT STREET
MURPHYSBORO, ILLINOIS

SOUTH ELEVATION
NOT TO SCALE

Drawn By:	Project No.:
MTB	9845
Date: 11/98	Sheet: 2 Of: 2